How Private Customers and Nonfederal Governments Obtain Technical Resources and Skills . . .

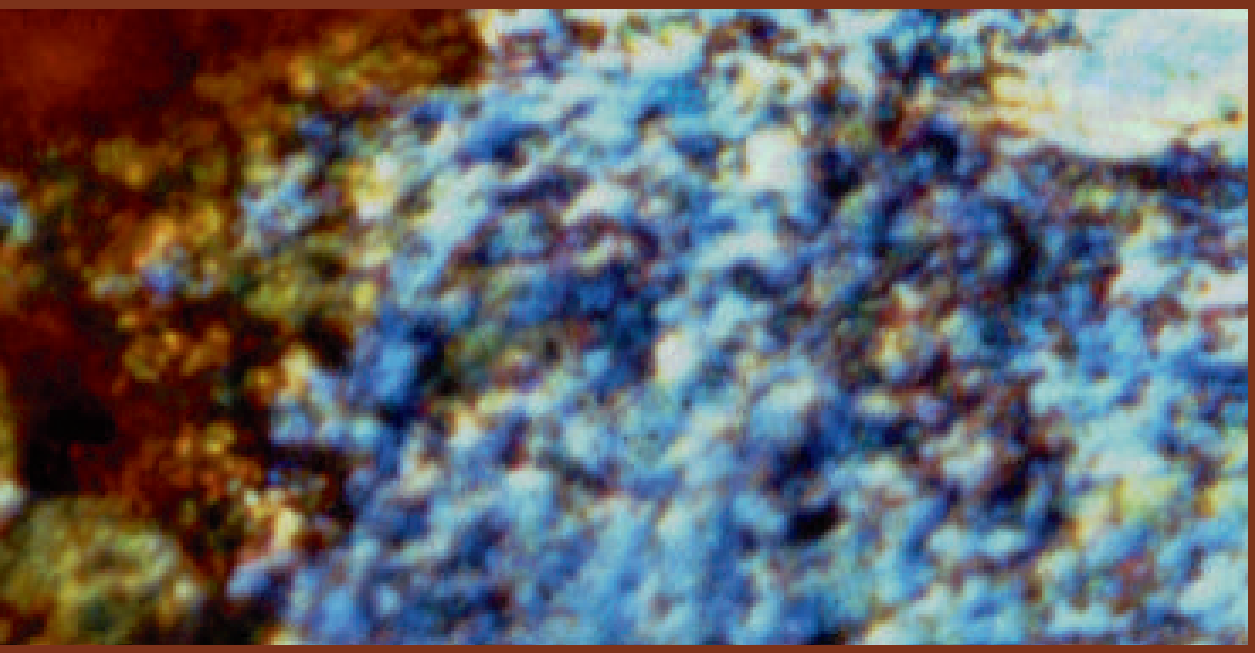

. . . from the U.S. Department of Energy

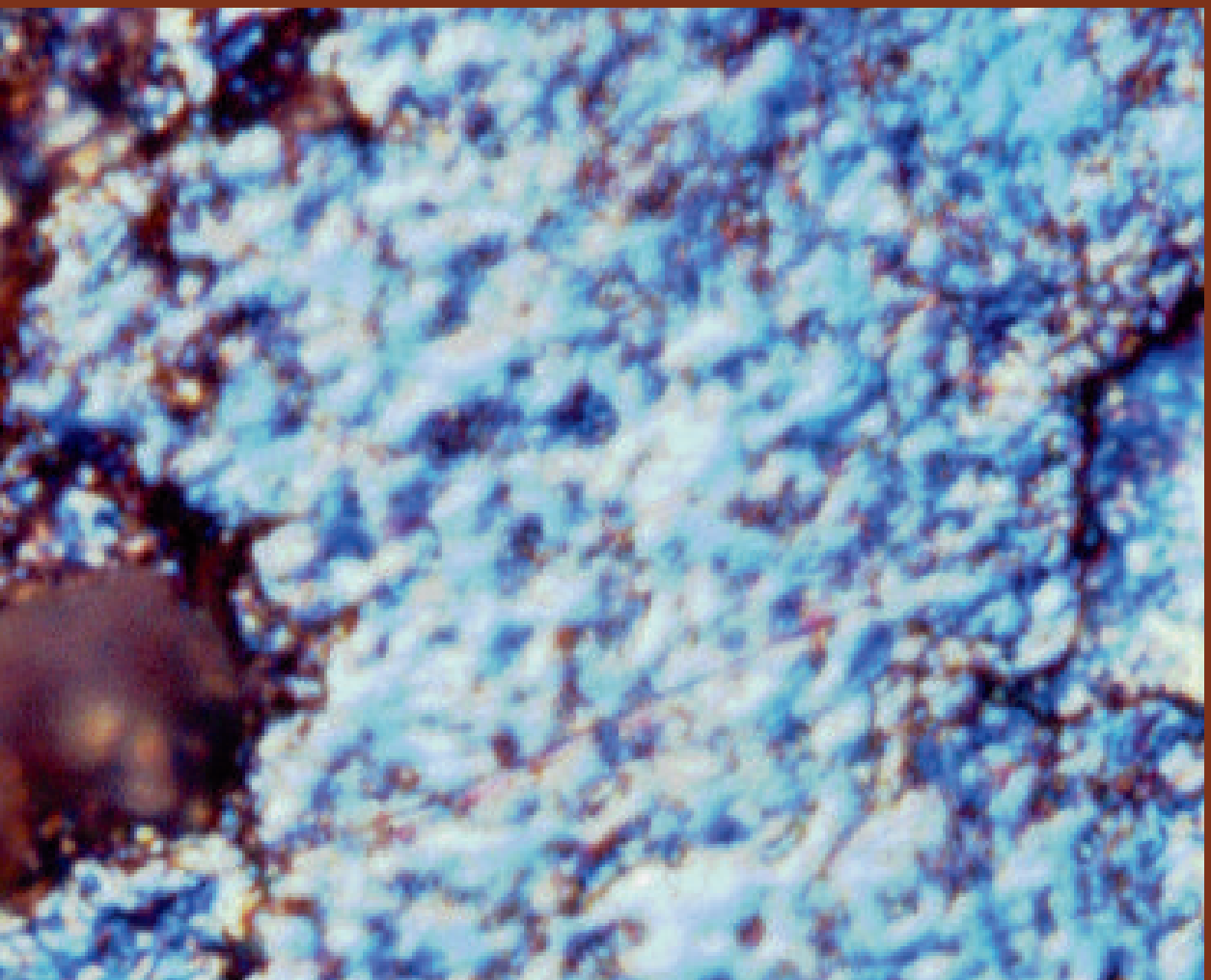

U.S. Department
of Energy

Assistant Secretary
for Human Resources
and Administration
January 1996

The U.S. Department of Energy technology transfer mission is to help enhance U.S. competitiveness and national security by expanding and accelerating the transfer of federally funded technologies and knowledge to commercial applications by U.S.-based industry.

Design and publishing support services by Argonne National Laboratory's Information and Publishing Division
Argonne National Laboratory is operated by the University of Chicago for the U.S. Department of Energy

Contents

2 *Introduction*

4 *Working with the U.S. Department of Energy Laboratories*

5 *Benefits of Using U.S. Department of Energy Facilities*

8 *Forming a Contractual Arrangement with the U.S. Department of Energy*

9 *Administration of Research Programs*
- Financial Requirements
- Patent Rights
- Ownership of Data
- Property and Equipment
- Environment, Safety, and Health
- Business-Sensitive Information
- Security Classification Guidance
- Subcontracting

12 *For Further Information*

The last half of the twentieth century has been called the "Age of Information." DOE laboratories have played an active part in this movement, helping to design and improve computerized diagnostic and control systems for manufacturers, distributed fault-tolerant computer systems, and data storage and retrieval systems. Based on the technology that has popularized virtual reality games in the entertainment industry, the CAVE Automatic Virtual Environment, shown here, lets scientists literally surround themselves with complex chemical, industrial, and medical data to simulate experiments in every field of research.

Introduction

As the United States approaches the twenty-first century, the U.S. Department of Energy (DOE) laboratories and technical centers — in particular, their many talented people — are exploring and expanding the frontiers of scientific understanding and technical knowledge. These people are committed to applying, in service to this country, their collective intellectual curiosity; a wide array of unique, multifaceted facilities and scientific tools; and a vast fund of accumulated professional expertise unmatched by any other nation.

Laboratory Resources and Skills Benefit Private Customers

By taking advantage of the resources offered by DOE's network of national laboratories, private customers can

- Access top-level scientific and engineering capabilities,
- Realize significant cost savings from using existing technologies and facilities,
- Solve difficult problems with solutions that may be unobtainable elsewhere,
- Advance critical technologies, and
- Promote national economic interests.

The DOE laboratories and technical centers (both hereafter referred to as laboratories or national laboratories) have always applied their resources and skills to the specific needs of nonfederal entities, including private companies, state and local governments, and academic institutions. As evidenced by past successes, DOE's network of laboratories is uniquely qualified to support nonfederal entities (hereafter referred to as private customers) as they seek to advance their knowledge.

The national laboratories have a long history of excellence in a number of areas, including the basic sciences, applied energy research, systems engineering, and weapons-related technologies. As a result of research at the laboratories, important scientific discoveries have been made and more efficient energy sources, new materials, and related technologies have been developed; at the same time, DOE-sponsored education, training, and outreach programs have increased the scientific and engineering capabilities of the nation as a whole.

In carrying out its mission, DOE has developed world-class core competencies in a number of important areas, including energy, pollution control and remediation, advanced materials, advanced instrumentation, biotechnology, advanced manufacturing, information and communication software, and aerospace and transportation technologies.

This brochure briefly describes guidelines for private customers wishing to obtain technical resources and skills from the national laboratories. The brochure does not, however, present all relevant contractual procedures; specific requirements may vary with the work proposed. For further information on working with national laboratories, contact any of the offices listed on page 12 of this brochure.

U.S. DOE Laboratory Scientists Bring Home the Gold

The U.S. Department of Energy has an unparalleled record of excellence in science and technology. Since the inception of the national laboratory system, 58 scientists supported by DOE and its predecessors have won the most prestigious scientific awards in the world, the Nobel prizes. Eighteen Nobel laureates who performed prize-winning research as staff in the DOE national laboratories are listed here. Thirteen other Nobel laureates (indicated by parentheses below) have employed national laboratory facilities in their award-winning discoveries.

Richard E. Taylor (with Jerome I. Friedman and Henry W. Kendall)
Physics, 1990 -- Investigations of deep inelastic scattering of electrons on protons and neutrons, thereby demonstrating the existence of quarks

(Norman Ramsey)
Physics, 1989 -- Present time standard, cesium atomic clock

Leon Lederman, Melvin Schwartz, and Jack Steinberger
Physics, 1988 -- New type of neutrino

Yuan T. Lee
Chemistry, 1986 -- Chemical dynamics, especially for definitive studies of noble gas elastic scattering that resulted in determination of potentials for quantum calculations

(Henry Taube)
Chemistry, 1983 -- Mechanisms of inorganic oxidation-reduction reactions

(Barbara McClintock)
Medicine, 1983 -- Fundamental contributions to molecular genetics, particularly for developing and proving the concept of "jumping genes"

(Kenneth G. Wilson)
Physics, 1982 -- Theory of critical phenomena in connection with phase transitions

James W. Cronin and Val L. Fitch
Physics, 1980 -- Violations of fundamental symmetry principles in the decay of neutral K mesons, nonconservation of charge conjugation, parity operations, and time-reversal invariance

Samuel C.C. Ting and Burton Richter
Physics, 1976 -- Discovery of new elementary particle type known as J or psi

Paul J. Flory
Chemistry, 1974 -- Long-chain molecules, polymers

(Ivan Giaver)
Physics, 1973 -- Tunneling in semiconductors and superconductivity

Luis W. Alvarez
Physics, 1968 -- Elementary particle physics, in particular the large number of resonant states (short-lived particles), by means of a bubble chamber of liquid hydrogen

(Hans A. Bethe)
Physics, 1967 -- Theory of nuclear reactions, especially for energy production in stars

(Eugene P. Wigner)
Physics, 1963 -- Theory of atomic nuclei and elementary particles, especially for fundamental principles of symmetry

(Maria Goeppert-Mayer)
Physics, 1963 -- Shell structure of neutrons and protons bound in nuclei

(Robert Hofstadter)
Physics, 1961 -- Electron scattering by atomic nuclei and structure of the nucleus

Melvin Calvin
Chemistry, 1961 -- Carbon dioxide assimilation of plants

Donald A. Glaser
Physics, 1960 -- Invented the bubble chamber to detect and determine the properties of more energetic elementary particles

Emilio G. Segre and Owen Chamberlain
Physics, 1959 -- Antiproton, a mirror-image particle of the proton

Chen Ning Yang and Tsung Dao Lee
Physics, 1957 -- Parity laws regarding the weak interaction

Glenn T. Seaborg (with Edwin M. McMillan)
Chemistry, 1951 -- Transuranic elements

(Isidor I. Rabi)
Physics, 1944 -- Resonance method of measuring the magnetic properties of atomic nuclei, NMR spectroscopy

Working with the U.S. Department of Energy Laboratories

The national laboratories are available to conduct work for private customers on a reimbursable basis. This research *is not* directly funded, in whole or in part, by DOE. (Guidelines governing work that *is* partly funded by DOE may differ from those described here.) Work undertaken for private customers

- Uses laboratory personnel,
- Pertains to the mission of the laboratory or facility,
- Does not conflict or interfere with achievement of DOE program requirements,
- Does not compete directly with capabilities available in the domestic private sector,
- Does not create a potential future burden on DOE resources, and
- Complies with established regulations for protecting human and animal subjects.

Historically, the Atomic Energy Act of 1954 recognized the benefits of making national laboratories and technical centers available to nonfederal entities for the conduct of R&D and training, provided that private facilities or laboratories are inadequate for that purpose.

In conducting work for private customers, DOE has the following objectives:

- Assist in accomplishing goals that may otherwise be unattainable.
- Avoid unnecessary duplication of effort.
- Provide access to highly specialized or unique facilities, services, or technical expertise.
- Increase the number of technologies transferred from the national laboratories to the marketplace for further development or commercialization.
- Maintain core competencies and enhance the science and technology base at the laboratories.

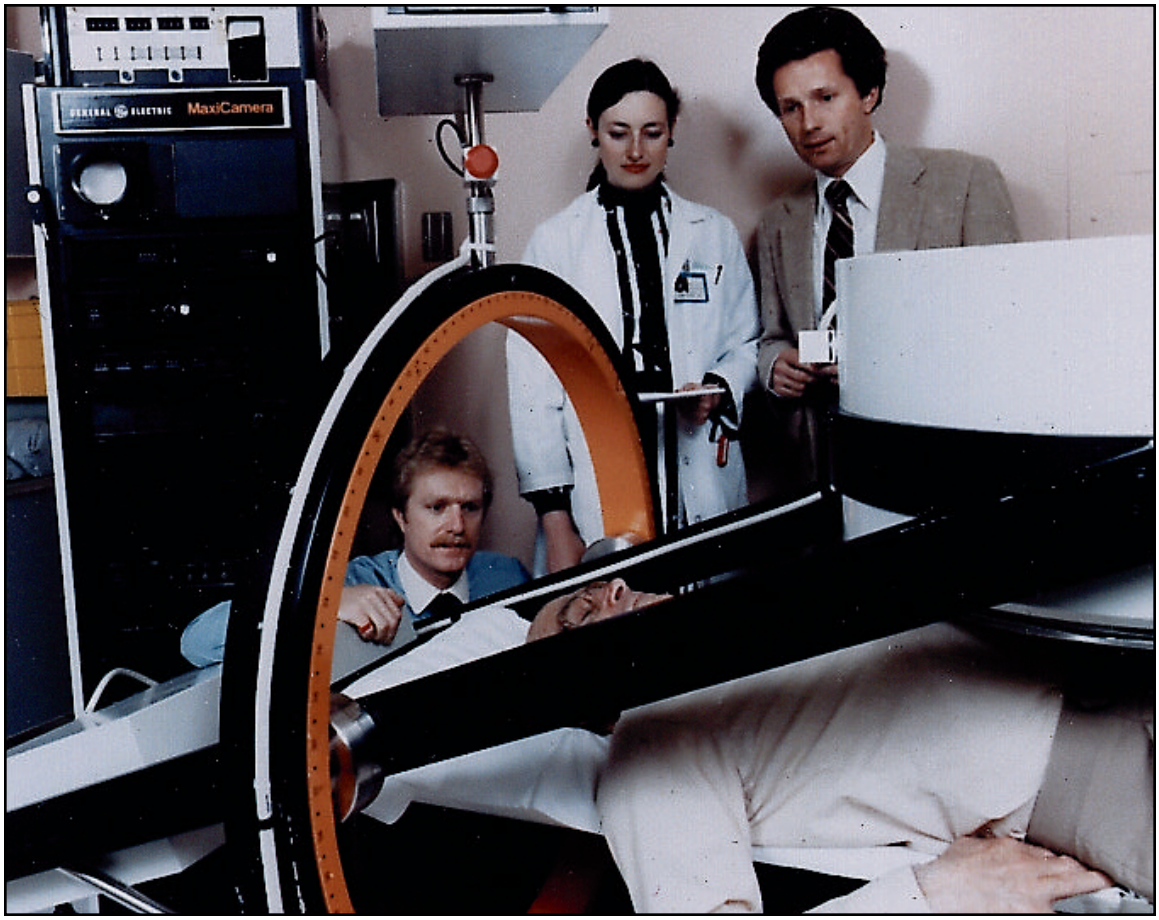

National laboratories are "pushing the envelope" of knowledge in medical research. Here, physicians are supported in their treatment of cancer patients by national laboratory scientists who gather and evaluate information from a nuclear imaging system. This information is used to prescribe single high-dose administration of the radiolabeled antibody, which is expected to completely destroy cancer cells with minimal side effects on the patient.

Benefits of Using U.S. Department of Energy Facilities

Private customers can benefit greatly by linking up with DOE's national laboratories. No other laboratory system in the world can match that of DOE for its diversity in people and programs; its attention to a spectrum of long- and short-term basic and applied research encompassing all areas of energy and environmental science; its wide variety of complex, multifaceted facilities; or its ability to deal independently and objectively with sensitive research topics.

This unique system serves as a bridge connecting all of the country's research communities — universities; industries; and federal, state, and local governmental agencies. As a vital link among these different organizations, the national laboratories are significant contributors in the cross-fertilization of ideas and approaches among the nation's researchers.

The excellence of R&D work conducted by the national laboratories is indicated by the high standing of their personnel within the scientific and technical community and the awards they receive within this community. For example, since the inception of the national laboratory system, 58 scientists supported by DOE and its predecessors have won the most prestigious scientific awards in the world, the Nobel prizes. Staff of the DOE laboratories have also received more than 375 R&D 100 awards, awarded each year by *R&D Magazine* to developers of the 100 technologically most innovative products.

The national laboratories' development of new materials and new ways to use and process them is essential to progress in all technological areas. Improvements in advanced ceramics, semiconductor deposition technologies, coatings and lubricants, hard-surfaced polymers, and nondestructive evaluation techniques can result in products that cost less and perform better. Here, researchers have developed a new process for making high-temperature thick-film flexible super-conducting tape.

1995 R&D 100 Award Winners from DOE Laboratories

In 1995, DOE laboratories won 27 R&D 100 Awards. Cumulatively, they have won more such awards than any other organization.

Ames Laboratory
- HINT

Argonne National Laboratory, Amoco Corporation, Pittsburgh Energy Technology Center
- CEMROX-Ceramic Membrane Reactor for Oxidation of Natural Gas

Idaho National Engineering Laboratory
- Gamma Neutron Assay System

Lawrence Berkeley Laboratory
- White Board-Session Directory-Video Conferencing-Video Audio Tool Software

Lawrence Livermore National Laboratory
- Aerogel Process Technology
- All-Solid-State Laser with Diode Irradiance Conditioning
- High Average Power Solid State Laser
- Miniature Ion Cyclotron Resonance Mass Spectrometer

Lawrence Livermore National Laboratory and American International Technologies, Inc.
- Sealed-Tube Electron Beam Gun

Los Alamos National Laboratory
- ARS Chemical Fill Detector
- HIPPI-SONET Gateway
- Hydride-Dehydride Recycle Process
- Microsensor for Volatile Organic Compounds

Los Alamos National Laboratory and Boeing Defense and Space Group
- Polymer Filtration System

Los Alamos National Laboratory and Indigo Medical, Inc.
- Indigo-830

Massachusetts Institute of Technology, Pacific Northwest National Laboratory, and T&R Associates
- Microwave Plasma Continuous Emissions Monitor

National Renewable Energy Laboratory
- Single-Fermenter Cellulosic Biocatalyst

National Renewable Energy Laboratory and Coors Ceramics Co./Golden Technologies, Inc.
- Method for Making Silicon Carbide Powder

Oak Ridge National Laboratory
- Exo-Melt Process
- Gelcasting
- Gravimetric Gas Flow Calibrator
- Magnetic Spectral Receiver

Pacific Northwest National Laboratory
- ERACE -- Electrical Remediation at Contaminated Environments

Pacific Northwest National Laboratory and Dassault Aviation
- Real Time Ultrasonic Imaging System (RTUIS)

Sandia National Laboratories
- Charge-Induced Voltage Alteration

U.S. Department of Energy, Fusion Lighting, Inc., and Lawrence Berkeley Laboratory
- Sulfur Lamp/SOLAR 1000

3M Company and Oak Ridge National Laboratory
- 3M Ceramic Composite Filter

Nationwide Laboratory Locations

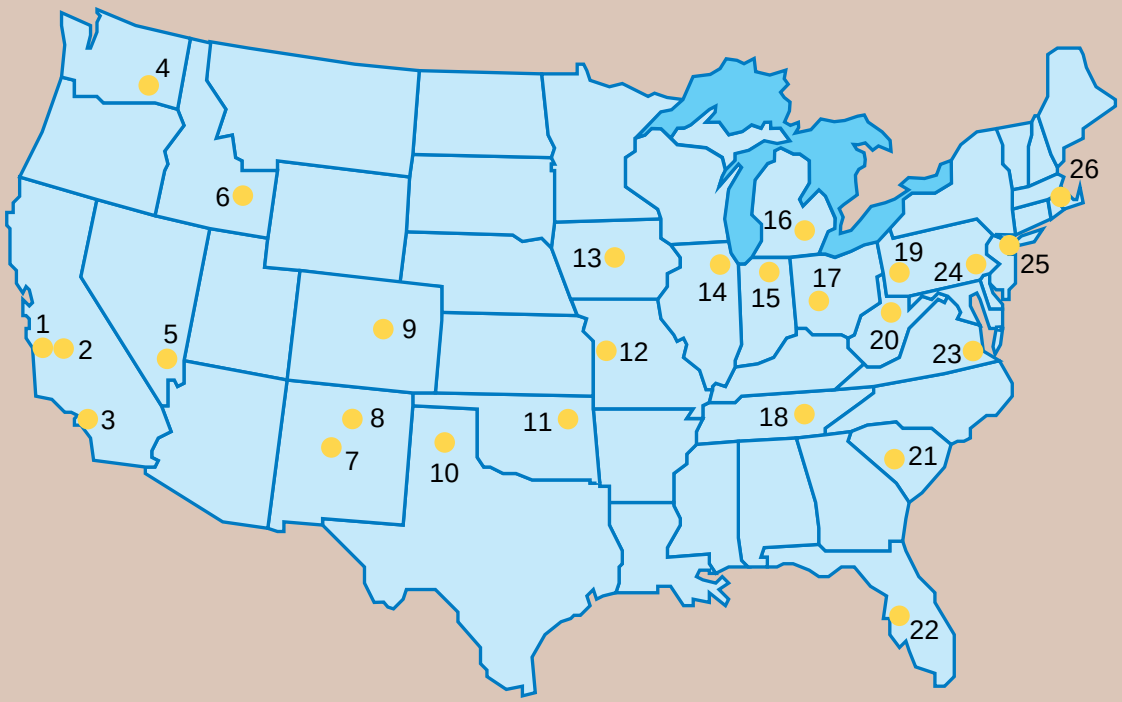

1. Lawrence Berkeley Laboratory
   Stanford Linear Accelerator Center
2. Lawrence Livermore National Laboratory
3. Energy Technology Engineering Center
4. Hanford Site
   Pacific Northwest National Laboratory
5. Nevada Test Site
6. Idaho National Engineering Laboratory
7. Inhalation Toxicology Institute
   Sandia National Laboratories
8. Los Alamos National Laboratory
9. National Renewable Energy Laboratory
   Rocky Flats Environmental Technology Center
10. Pantex Plant
11. Bartlesville Project Office
    National Institute for Petroleum and Energy Research
12. Kansas City Plant
13. Ames Laboratory
14. Argonne National Laboratory
    Fermi National Accelerator Laboratory
    New Brunswick Laboratory
15. Notre Dame Radiation Laboratory
16. MSU-DOE Plant Research Laboratory
17. Mound Facility
18. Oak Ridge Institute for Science and Education
    Oak Ridge K-25 Site
    Oak Ridge National Laboratory
19. Pittsburgh Energy Technology Center
20. Morgantown Energy Technology Center
21. Savannah River Ecology Laboratory
    Savannah River Site
22. Pinellas Plant
23. Continuous Electron Beam Accelerator Facility
24. Princeton Plasma Physics Laboratory
25. Brookhaven National Laboratory
    Environmental Measurements Laboratory
26. Bates Linear Accelerator Center

A growing number of remarkable achievements are resulting from the teaming of nonfederal entities with the U.S. Department of Energy's national laboratories. These success stories offer ample evidence that Americans are working together to secure major benefits for the nation -- by matching the technological, scientific, and human resources resident in our national laboratories with the private sector's research needs.

Forming a Contractual Arrangement with U.S. Department of Energy Laboratories

Private customers can arrange for work to be done at any national laboratory through a relatively simple business arrangement. The key steps in the overall process are:

Early Interaction between DOE Laboratory and Private Customer. Discussions are informal. Planning documents, capability statements, and related material are of a preliminary nature. No commitments are made on either side.

Formal Request. After a formal request is received from a private customer, the laboratory prepares work statements, budget estimates, and resource requirements.

Project Review and Approval. DOE, its laboratory, and the requesting private customer review and approve work statements, budget estimates, and related documents, thereby ensuring that the needs of all parties are met.

Funding Acceptance and Authorization. The laboratory begins work when the agreement is executed and funded.

Project Performance. The project is performed on a best-effort basis, in compliance with the terms and conditions of each individual agreement.

Billing and Payment. Bills are issued monthly; payments are normally due within 30 days of the billing date.

Administration of Research Programs

Financial Requirements

Financing of Work. Federal law prohibits the use of DOE funds to finance or supplement a private customer's work. The private customer should have sufficient funding available at all times to cover incurred and expected costs, thereby avoiding work stoppages. The private customer is responsible for termination costs if a project is terminated before its completion. The DOE office responsible for the work may grant exemptions to the full-funding requirement if the laboratory involved requests an exemption.

Cost Recovery — Rate Structure. Generally, the private customer is charged all costs associated with the project. Under certain conditions, DOE may waive overhead and other charges.

Financial Controls. Work is done according to the individual contract provisions and the following guidelines:

- Work to be performed by national laboratories is reviewed, approved, and accepted by DOE before work can begin.
- Work does not continue and costs are not incurred beyond either the time period agreed upon or the amount of funding provided.

Patent Rights

Patent rights are allocated by contract terms and conditions, applicable international agreements, statutes and regulations, and DOE policies.

Ownership of Data

Unless otherwise agreed to by DOE, the federal government owns all technical data resulting from the work. However, contract terms provide for the protection of any proprietary data furnished by the private customer.

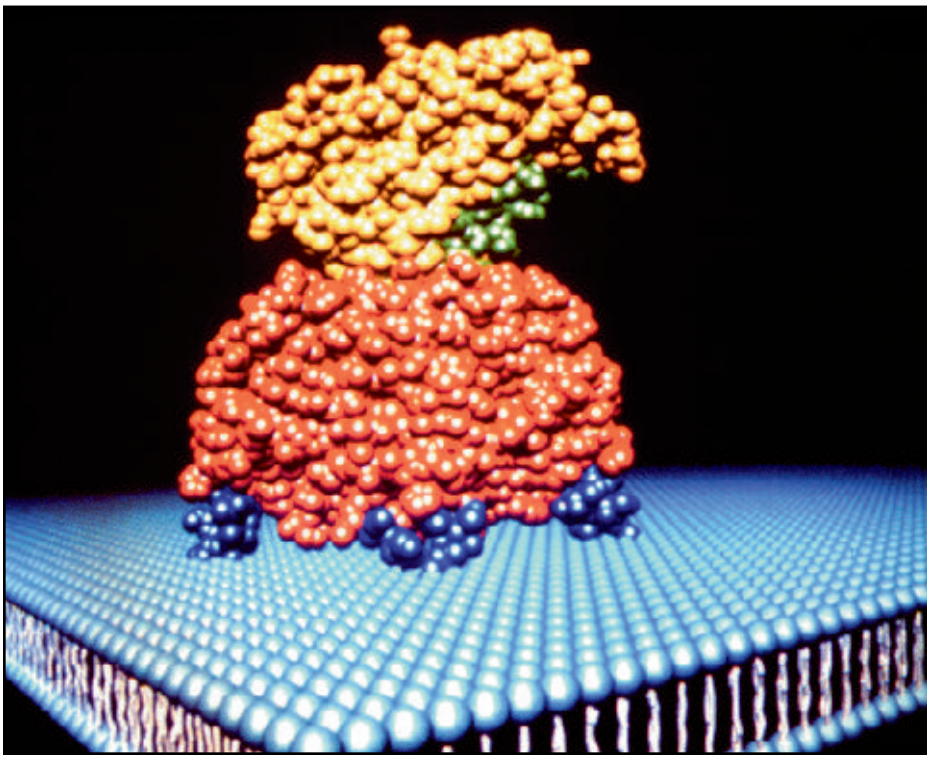

The national laboratories are successfully expanding the use of biotechnology into industrial and environmental applications important to the U.S. economy -- such as the large-scale manufacture of chemicals, pollution prevention, and environmental remediation. Using ultra-brilliant x-ray beams, scientists are on the lookout for new medicines, industrial enzymes, and other biotechnology products. Shown above, scientists have determined the structure of cholera toxin, a protein, and how it is able to attack the body. The role of this protein in the disease process is now being investigated.

Intense global competition, increasingly stringent environmental mandates, and volatile fuel prices are affecting the U.S. transportation industry. With a broad and varying range of expertise that includes alternative fuels, state-of-the-art energy-storage devices, instrumentation and sensors, materials recycling, improved manufacturing methods, advanced computing, and advanced materials, the national laboratories are working to provide new technologies and techniques that can strengthen the transportation sector. Shown here, researchers are evaluating the use of monatomic nitrogen to reduce nitrogen oxide emissions from engines.

Property and Equipment

Title to permanent construction at DOE laboratories or sites passes to DOE upon completion of construction and acceptance by DOE. If equipment is acquired as part of the project, it is accounted for and maintained during the term of the agreement in the same manner as DOE property. When the agreement terminates, equipment is disposed of under the conditions of the original agreement or as instructed by the private customer. This equipment is delivered to the private customer's location, transferred to DOE, or declared as excess in accordance with federal government property regulations.

Environment, Safety, and Health

Each project is conducted in compliance with applicable environment, safety, and health statutes, regulations, and standards. DOE has the authority to stop work if applicable requirements are not met.

Business-Sensitive Information

If a research project involves confidential, nondisclosure, or proprietary information, the requesting private customer provides relevant guidance before the work begins.

Security Classification Guidance

For work involving classified information, DOE and its laboratory classification staff work with the private customer to develop appropriate security classification guidance.

Subcontracting

A DOE national laboratory may sometimes elect to subcontract selected portions of a project. In these cases, the DOE laboratory selects the subcontractor and the work to be subcontracted. The requesting private customer cannot designate either the subcontractor to be used or the portions of the work to be subcontracted.

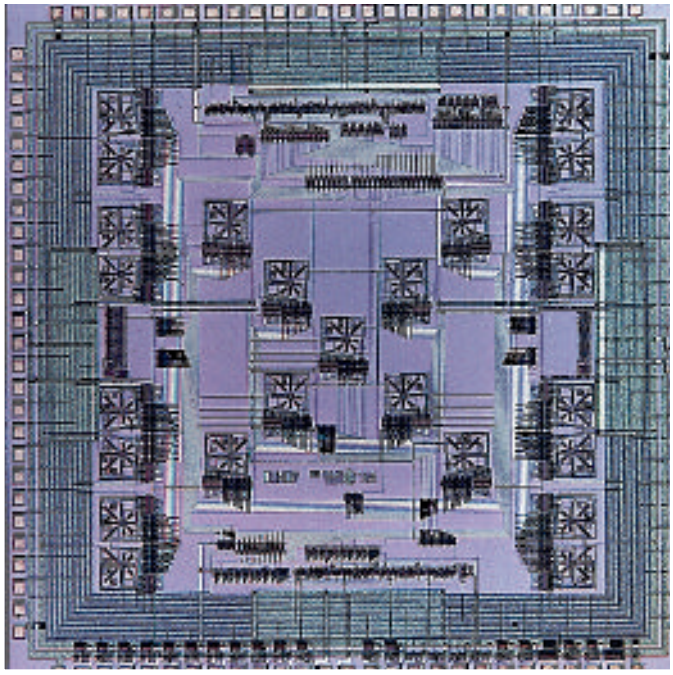

The latest, most advanced manufacturing technologies are being made available to U.S. manufacturers through work being conducted at national laboratories. Virtually every innovative aspect of manufacturing, such as the processes and equipment used to design, engineer, and manufacture products -- as well as the organizational technologies, methods, and expertise needed to manage production and commercialization -- are being continually researched and updated. Here, a new family of sensor-rich, silicon test chips has been developed and produced to provide fast, quantitative evaluation of microelectronics packaging.

For Further Information

For more information on working with DOE laboratories, please send your written request to any of the following persons. Briefly describe your specific area of interest or need, and include your name, address, and phone and fax numbers.

Todd Zdorkowski
Ames Laboratory
Iowa State University
Room 326, TASF
Ames, IA 50011
515/294-5640
515/294-3751 (fax)
zdorkowski@ameslab.gov

Richard Combs
Argonne National Laboratory
9700 South Cass Avenue
Argonne, IL 60439
708/252-6797
708/252-3679 (fax)
wigell.otd@mhs201.otd.anl.gov

Bernard McAlary
Brookhaven National Laboratory
P.O. Box 5000, Building 460
Upton, NY 11973-5000
516/282-3330
516/282-2149 (fax)
mcalaryl@bnl.gov

John Venard
Fermi National Accelerator Laboratory
P.O. Box 500, MS-200
Batavia, IL 60510
708/840-2529
708/840-8752 (fax)
venard@fnal.gov

Doug Mohr
Idaho National Engineering Laboratory
P.O. Box 1625
Idaho Falls, ID 83415-3805
208/526-1492
208/526-7146 (fax)
hdm@inel.gov

Rick Inada
Lawrence Berkeley Laboratory
Technology Transfer Department
One Cyclotron Road, MS-90-1070
Berkeley, CA 94720
510/486-5882
510/486-4386 (fax)
rminada@lbl.gov

Cory Coll
Lawrence Livermore National Laboratory
P.O. Box 808, L-159
Livermore, CA 94550
510/422-2103
510/423-7354 (fax)
coll1@llnl.gov

Larry Warner
Los Alamos National Laboratory
P.O. Box 1663, MS-F655
Los Alamos, NM 87545
505/667-2220
505/665-7391 (fax)
warner_laurance_b@lanl.gov

Ken Algiene
National Renewable Energy Laboratory
Building 17/3
1617 Cole Boulevard,
Golden, CO 80401
303/275-3017
303/275-3040 (fax)
ken_algiene@nrel.gov

Edward Jon Soderstrom (E.J.)
Oak Ridge National Laboratory
P.O. Box 2008
Oak Ridge, TN 37831-6247
615/574-5953
615/576-7729 (fax)
soderstromej@ornl.gov

Barb Hays
Pacific Northwest National Laboratory
P.O. Box 999, MS-K8-50
Richland, WA 99352
509/372-4008
509/372-4038 (fax)
ba_hays@pnl.gov

Lew Meixler
Princeton University Plasma Physics Laboratory
P.O. Box 451
Princeton, NJ 08543
609/243-3009
609/243-2800 (fax)
lmeixler@pppl.gov

Bill Lovejoy
Sandia National Laboratories
P.O. Box 5800, MS-0163
Albuquerque, NM 87185
505/844-3911
505/844-1196 (fax)
wclovej@sandia.gov

Judy Bostock
DOE Savannah River
Office of Community Outreach
P.O. Box A
Aiken, SC 29802
803/725-3821
803/725-5968 (fax)

Dick Fuendeling
Stanford Linear Accelerator Center
P.O. Box 4349
Stanford, CA 94309
415/926-2211
415/926-4999 (fax)
karenk@slacvm.slac.stanford.edu